Connector

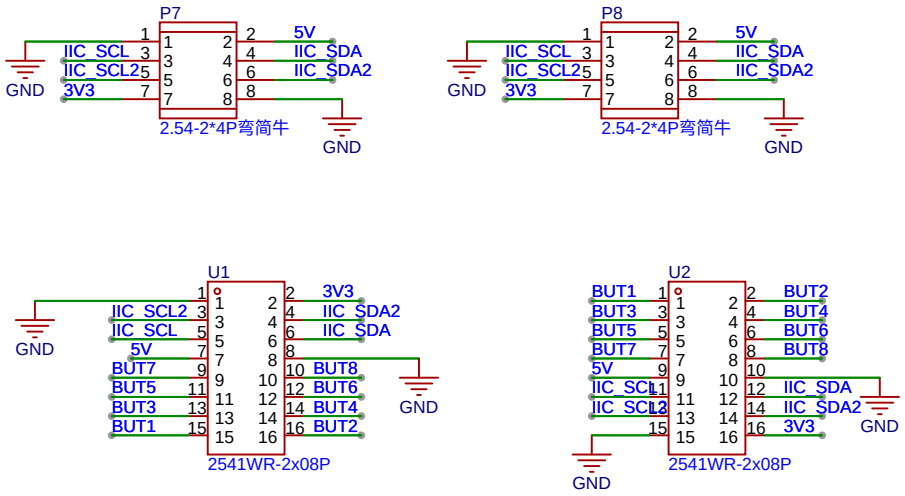

carletz	DOMIX - Domotic module for smart home & co	Create at	2026-02-07	Drawn	carletz
		Update at	2026-02-09	Reviewed	carletz
	Version / Size / Page 1 Total 1	Schematic	M9 - Vertical Module		
	1 / A4 / EasyEDA	Board	V9 - SPRINKLER - VERTICAL	Page	Connector